Tiandy

TC-H324S Spec: 23X/I/E/V3.0

2MP 23× Starlight IR PTZ Camera

Lite Series

KEY FEATURES

- Up to 1920X1080@30fps
- Min. illumination Color: 0.001Lux@F1.5
- Optical zoom: 23×, digital zoom 16×
- Support Human/Vehicle Classification
- Smart IR, IR Range: 150m
- S+265/H.265/H.264/M-JPEG
- Plugin Free
- IP66

Tiandy Technologies Co.,Ltd.
Email: sales@tiandy.com Tel: +86-22-58596178
Website: en.tiandy.com Fax: +86-22-58596048

Tiandy

SPECIFICATIONS

Camera	
Image Sensor	1/2.8" CMOS
Signal System	PAL/NTSC
Min. Illumination	Color: 0.001lux@ (F1.5, AGC ON), BW: 0lux with IR
Shutter Time	1s to 1/100,000s
Day & Night	Dual IR Cut Filter with Auto Switch
Wide Dynamic Range	Mechanical wide dynamics
Optical Zoom	23×
Digital Zoom	16×
Lens	
Focal Length	5mm~115mm
Zoom Speed	<4s
Angle of View	Horizontal: 55.8° (w)~3.2° (t) Vertical: 33.2° (w)~1.8° (t)
Aperture Range	F1.5~F3.0
Pan&Tilt	
Pan Range	360°
Pan Speed	Pan Manual Speed: 0.1°~80°/s, Pan Preset Speed: 80°/s
Tilt Range	-16°~90° (Auto flip)
Tilt Speed	Tilt Manual Speed: 0.1°~80°/s, Tilt Preset Speed: 80°/s
3D Position	Yes
Presets	500
Preset Accuracy	±0.5°
Scan	8
Cruise	16
Pattern	8
Power-off Memory	Yes
RS-485 Protocols	N/A
Illuminator	
IR LEDs	7
IR Range	Up to 150m
IR Irradiation Angle	Adjustable by Zoom
White LEDs	N/A
Compression Standard	
Video Compression	S+265/H.265/H.264/M-JPEG
Video Bit Rate	32Kbps~16Mbps
Audio Compression	G.711A/G.711U/ADPCM_D/AAC_LC
Sampling Rate	8kHz/32kHz/48kHz
Image	
Max. Resolution	2.0MP (1920×1080)
Main Stream	PAL: 25fps (1920×1080, 1280×720, 704×576, 640×480) NTSC: 30fps (1920×1080, 1280×720, 704×480, 640×480)
Sub Stream	PAL: 25fps (704×576, 704×288, 640×360, 352×288) NTSC: 30fps (704×480, 704×240, 640×360, 352×240)
Third Stream	PAL: 25fps (352×288) NTSC: 30fps (352×240)
Image Setting	Saturation, brightness, contrast, sharpness, adjustable by client software or web browser
Image Enhancement	BLC/3D DNR/HLC
ROI	7 Areas for Both Main and Sub Stream
OSD	16×16, 24×24, 32×32, 48×48, 64x64, adaptable size, Letters Such as Week, Date, Time, Total 5 Regions
Picture Overlay	Yes
Privacy Mask	-
Smart Defog	-

Tiandy

Feature	
Alarm Trigger	Event Input, Event Output, Mask Alarm, Disk Full, Disk R/W Error, IP Address Conflict, MAC Address Conflict, FTP Server Exception
Video Analytics	Tripwire, Double Tripwire, Perimeter, Object Abandon, Object Lost, Video Abnormal, Audio Abnorma
Early Warning(EW)	N/A
Auto-Tracking	N/A
Face Detection and Analytics	
Operating Mode	N/A
Face Detection Performance	N/A
Face Exposure Brightness	N/A
Min. Face Pixel	N/A
Precautionary Alert	N/A
Network	
Protocols	TCP/IP, HTTP, HTTPS, FTP, DHCP, DNS, DDNS, RTSP, PPPoE, NTP, UPnP, SMTP, QoS, IPV4, MULTICAST, RTMP
System Compatibility	ONVIF (PROFILE S/T/G/M), SDK, CGI, P2P
ANR	-
Remote Connection	≤7
Client	Easy7, EasyLive Plus
Web Version	web6
Interface	
Communication Interface	1 RJ45 10M/100M self adaptive Ethernet port
Audio	1/1
Alarm	1/1
Speaker	N/A
Reset Button	Yes
On-board storage	Built-in MicroSD card slot, up to 512 GB
RS-485	N/A
BNC	N/A
Wiper	N/A
General	
Firmware Version	-
Web Client Language	17 languages Simple Chinese, Traditional Chinese, English, Spanish, Korean, Italian, Turkish, Russian, Thai, French, Polish, Dutch, Hebraism, Arabic, Vietnamese, German, Ukrainian
Operating Conditions	-30°C~65°C (IR OFF), -30°C~40°C (IR ON), 0-95%RH
Power Supply	DC12V±10%/POE
Power Consumption	7.15W(IR OFF), 18.5W(MAX)
Protection	IP66, Lightning protection, surge protection and voltage transient protection meets EN 55035:2017
Heater	N/A
Dimensions	161mm（D）×276mm（H）
Weight	2kg(4.40lb)

* Listed resolutions are only selectable options. It does not mean that all streams can work at their maximum resolution at the same time.

AVAILABLE MODEL

TC-H324S SPEC: 23X/I/E/V3.0

Tiandy

DIMENSIONS

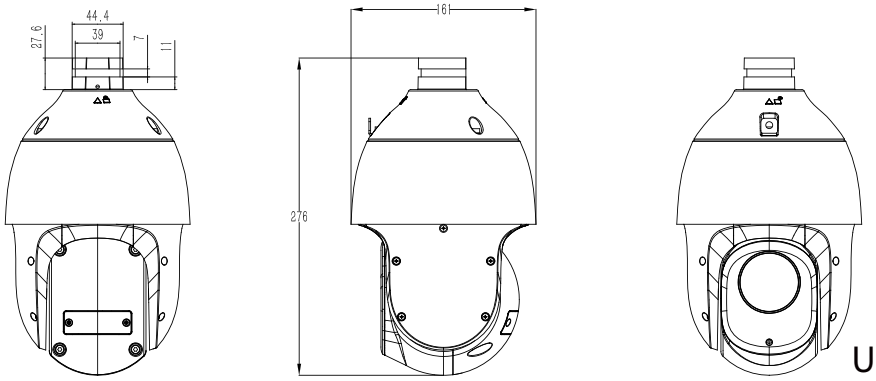

Unit: mm

INCLUDED

TC-P52BM Spec: 4
Wall Mount

ACCESSORIES

A37
Installation Adapter

DF21Y
Pendant Mount

A36
Pole Mount

A35
Corner Mount

811
Junction Box

DISTRIBUTED BY

Tiandy Technologies Co.,Ltd.
Email: sales@tiandy.com Tel: +86-22-58596178
Website: en.tiandy.com Fax: +86-22-58596048